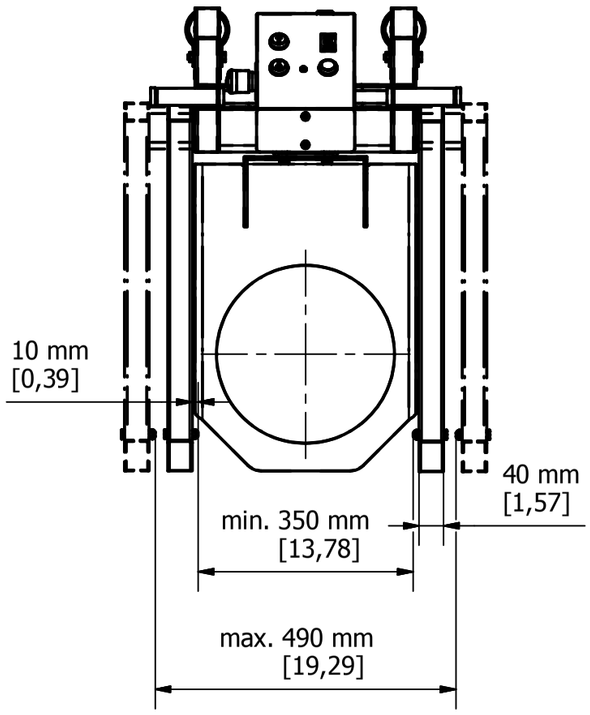

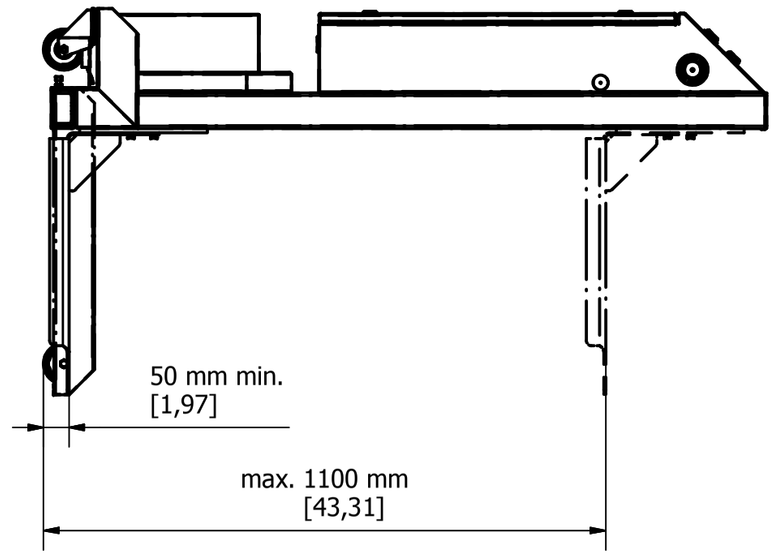

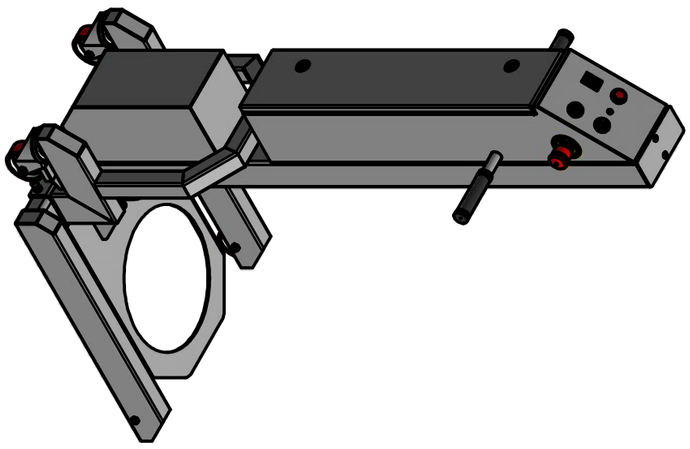

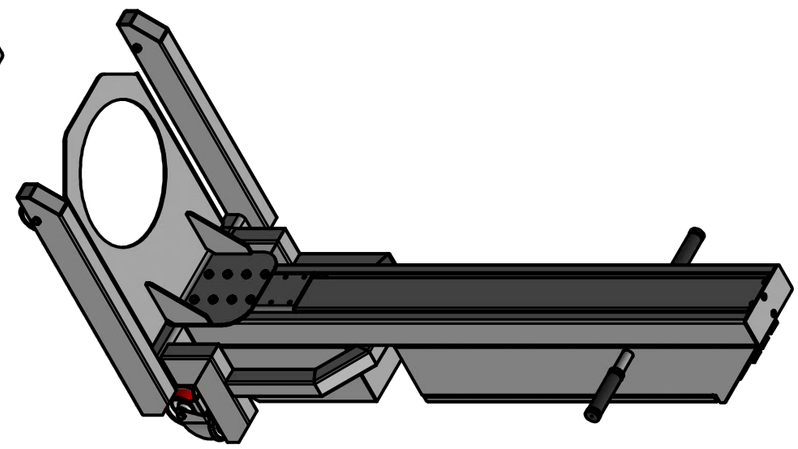

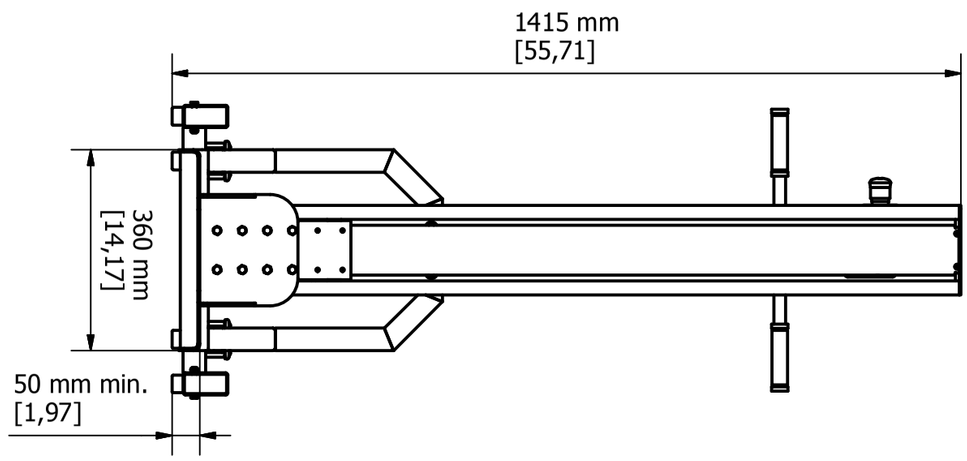

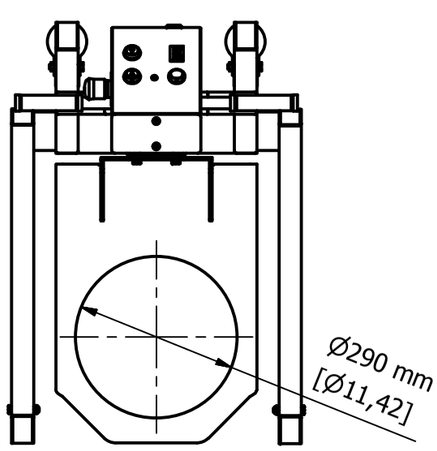

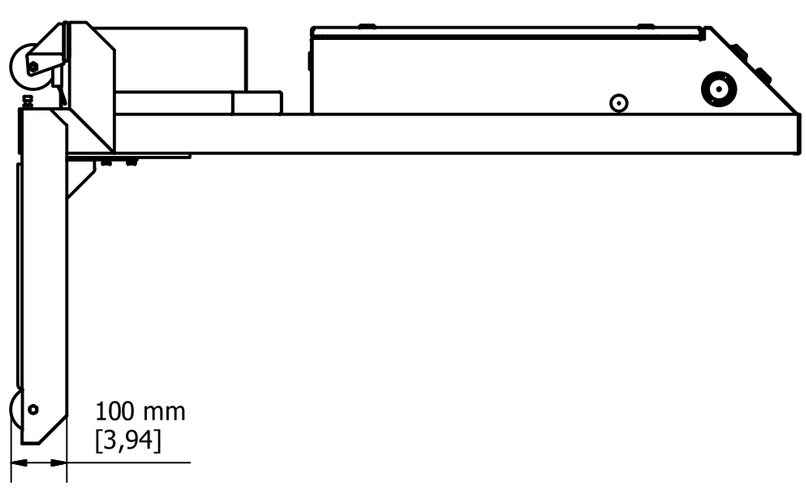

CHOP FOOD
EQUIPMENT

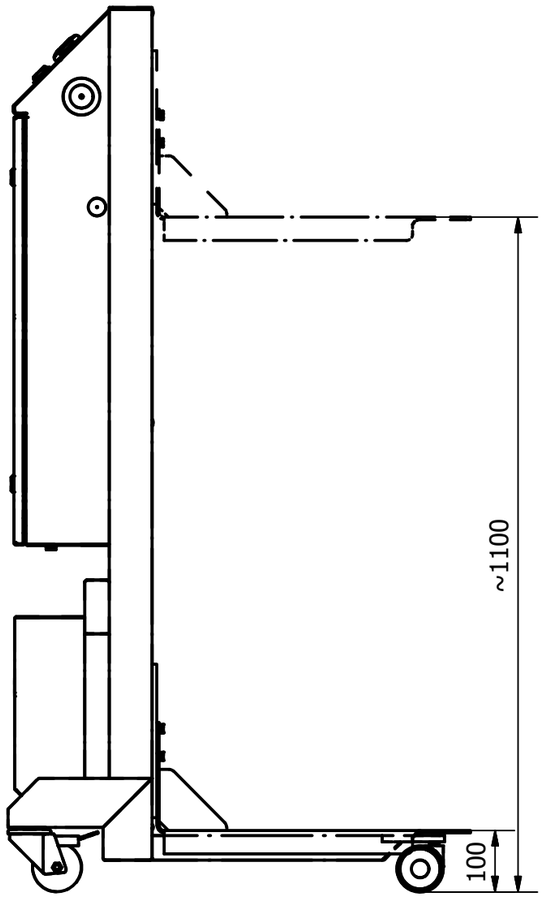

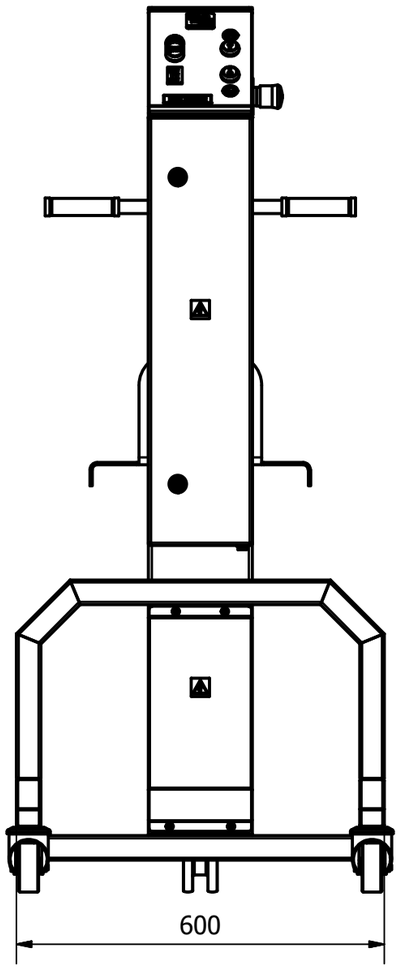

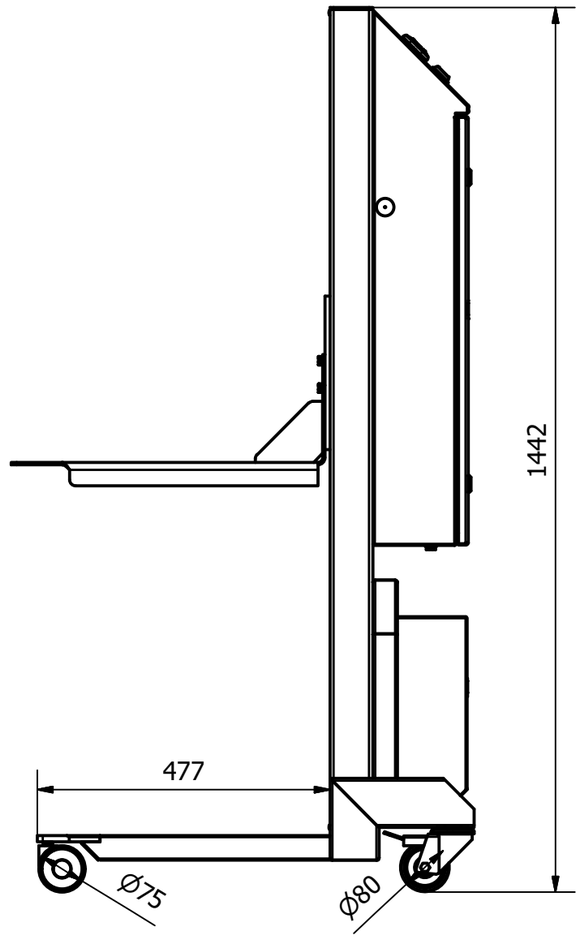

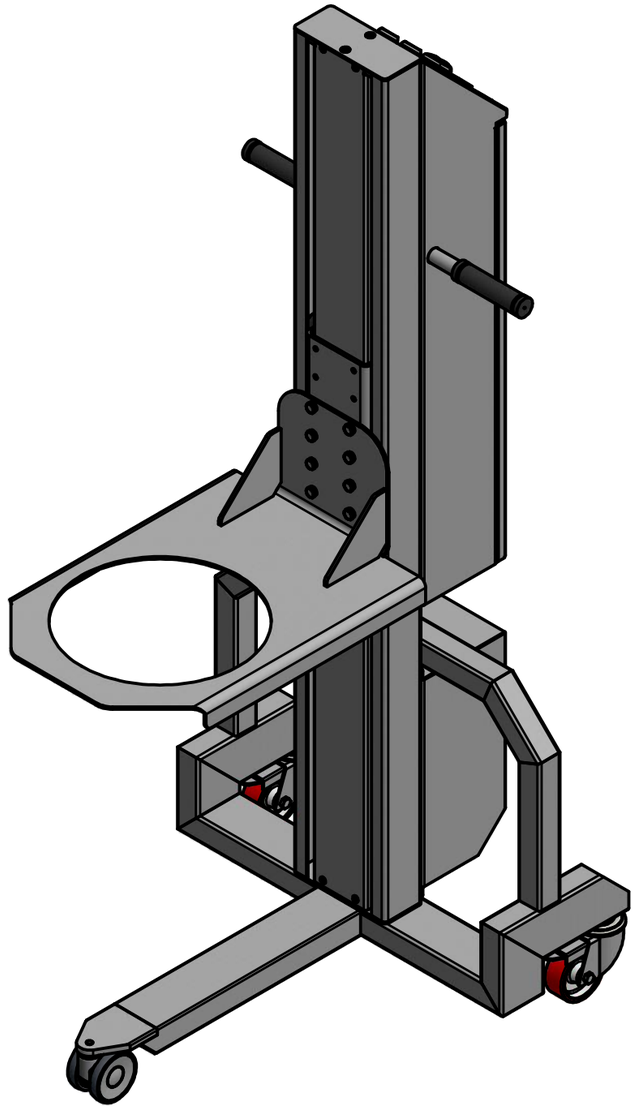

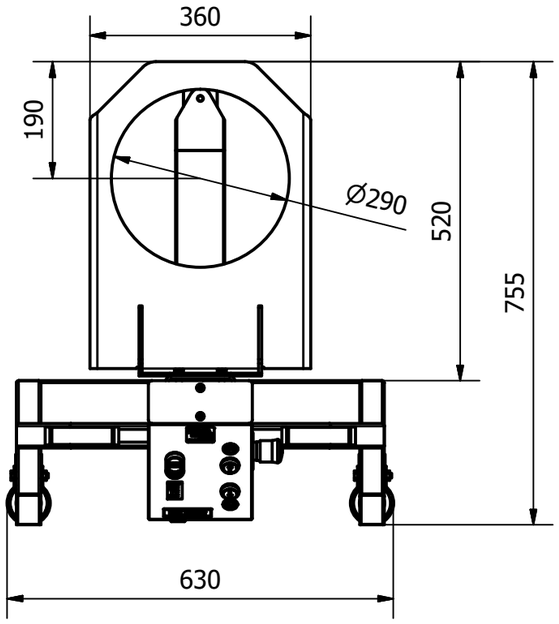

CHOP FOOD
EQUIPMENT

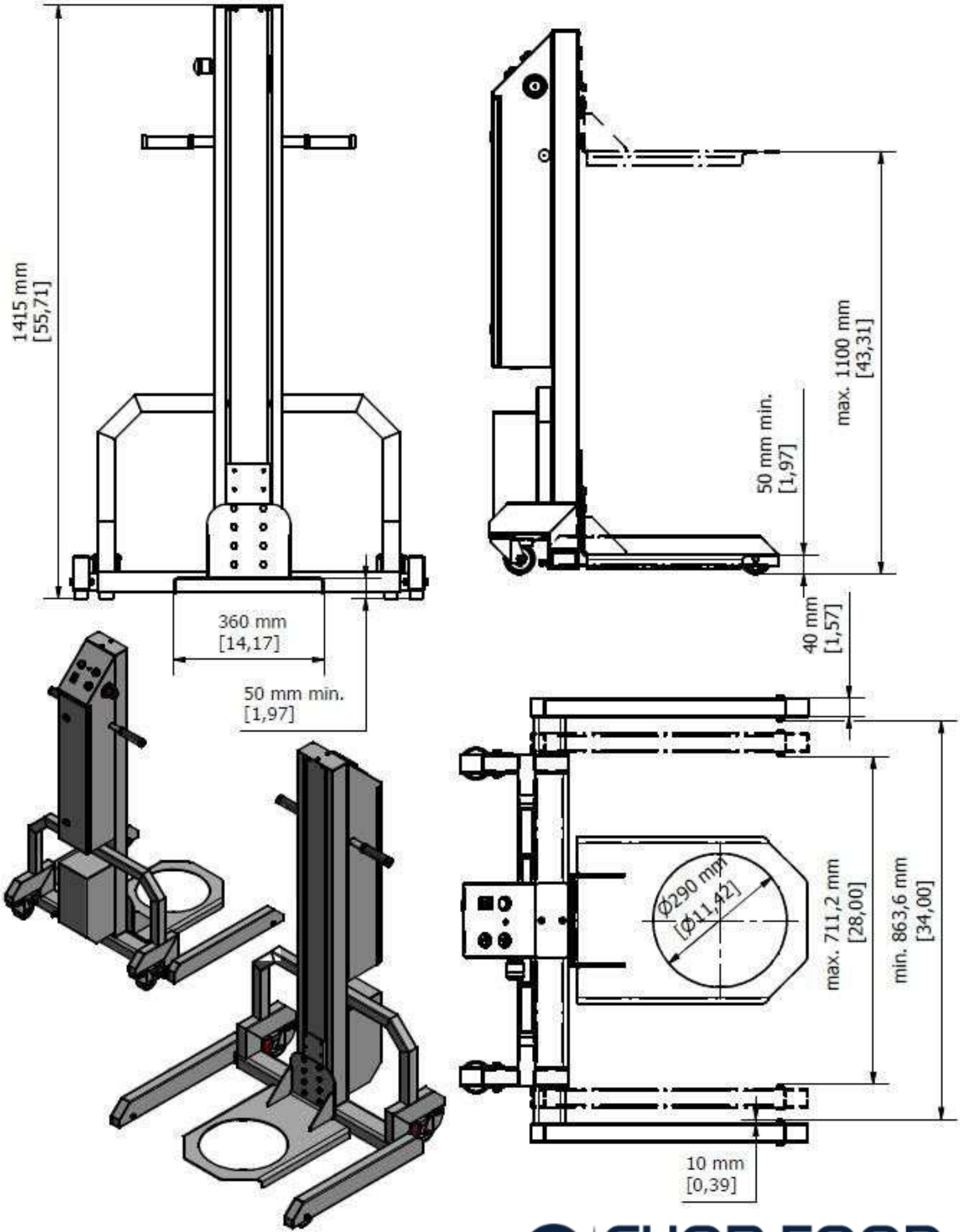

CHOP FOOD
EQUIPMENT